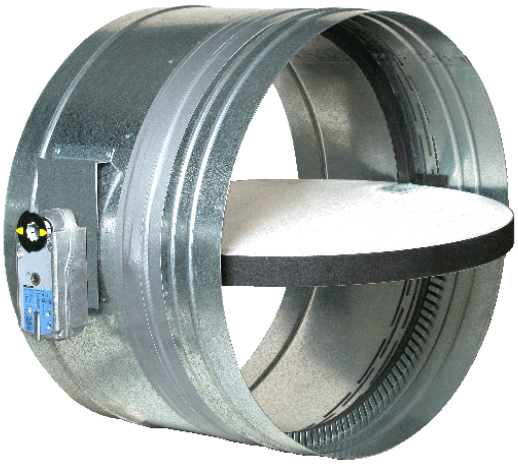

Approved by an Independent Laboratory EN-1366-2

Patented

FOC-EIS-120 EN-1366-2 fire dampers

MADEL®

Fire dampers for circular duct mounting. Dampers designed to maintain the fire resistance of the wall or the floor, in which a passage for ventilation, heating or air conditioning ducts has been made. They have been tested in accordance with the standards EN-1366-2 achieving the fire resistance EIS 120 (Integrity, Insulation and smoke leakage during 120 minutes), to comply with building regulations for fire safety.

In case of fire, the damper stops the air passage at 72ºC by means of a fusible link that closes a blade valve. An expanding joint and another one of air tightness, as much prevent the propagation of smoke to high as to low temperature. These dampers full fill the required conditions for the (S) symbol, air-tightness to cold smoke. In case of fire, poisoning by smoke is the main cause of death.

Dampers with the displaced mechanism that facilitates a good installation.

FOC-EIS-120

200 / 250 / 315 / 355 / 400 / 500 / 630

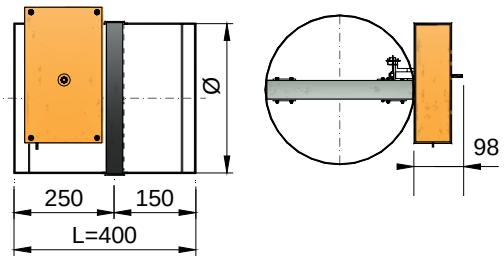

FOC-EIS-120-M7F

200 / 250 / 315 / 355 / 400 / 500 / 630

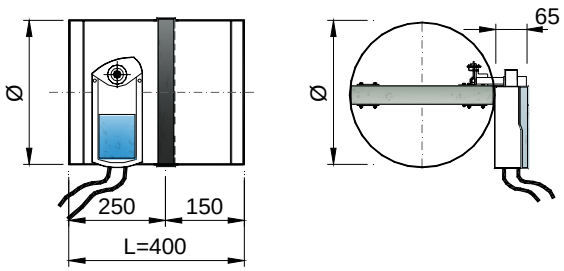

80 / 100 / 125 / 160

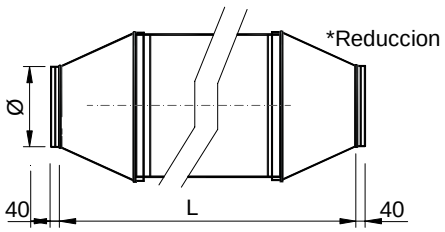

Dn	Ø	L
80*	78	790
100*	98	734
125*	123	666
160*	158	570

*Reduccion

Dn	Ø	L
200	198	400
250	248	400
315	313	400
355	353	400
400	398	400
500	498	400
630	627	400

CLASSIFICATION

FOC-EIS-120 Circular damper.

…-M7F Damper operated by an actuator with switch off device at 24 or 230v.

…-MA Manual resetting damper. Is not necessary to open the box device.

/PIF/FBC/FBA/FEC/FEA/

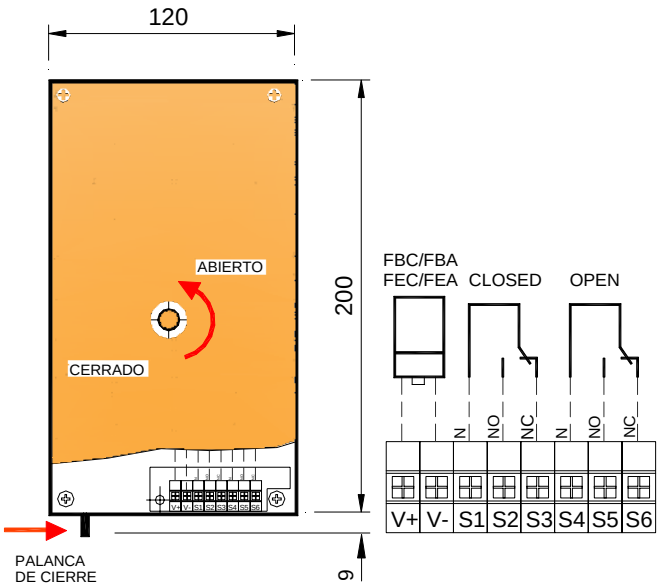

M7F

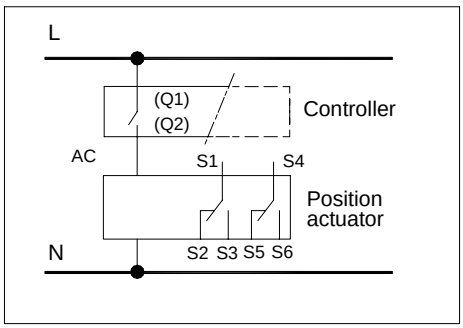

MATERIAL

Dampers made from galvanised steel and non-combustible board.

ADDITIONAL ACCESSORIES

/PIF/ Open / closed switches device.

/FBC/ Electromagnet at 24/48v. Closes by electric current.

/FBA/ Electromagnet at 230v. Closes by electric current.

/FEC/ Electromagnet at 24/48v. Closes when current stops.

/FEA/ Electromagnet at 230v. Closes when current stops.

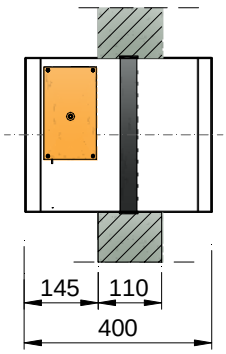

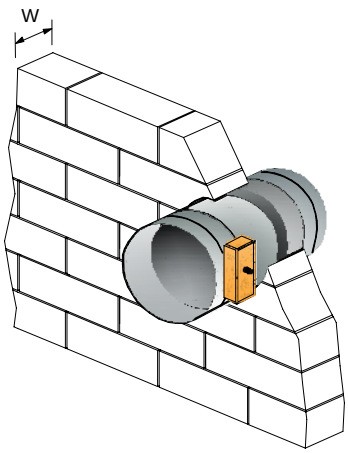

FIXING SYSTEMS

The damper is fixed in accordance with the figure.

The damper cannot be fixed in place when vibrations are occurring.

The dampers must be installed in a way that they can be operated manually.

Precautions will have to be taken in order to ensure that the air flow reaches the fire damper uniformly.

SPECIFICATION TEXT

Supply and mounting of fire damper for circular duct classed EIS-120 in accordance to the European standard EN-1366-2 series **FOC-EIS-120-M7F24 D=200**. Operated by means of a servomotor at 24v **M7F24**, start and end of course switches. Dampers made from galvanised steel and non-combustible board. Thermal fusible link at 72ºC. An expanding joint together an air-tightness joint, as much prevent the propagation of smoke to high as to low temperature. Manufacturer **MADEL**.

FOC

NECK AREA m2.

AX6	A k m2	Qmin m3/h	Qmax m3/h
80	0.0005	54	126
100	0.0078	85	196
125	0.0122	130	307
160	0.020	216	504
200	0.031	330	780
250	0.049	529	1234
315	0.0779	840	1960
355	0.0989	1068	2492
400	0.125	1350	3150
500	0.196	2117	4940
630	0.312	3369	7862

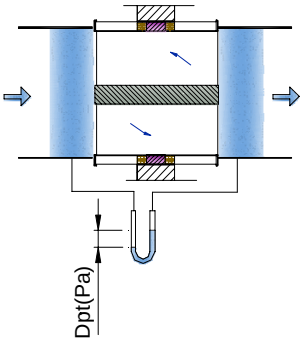

PRESSURE LOSS AND SOUND POWER LEVEL.

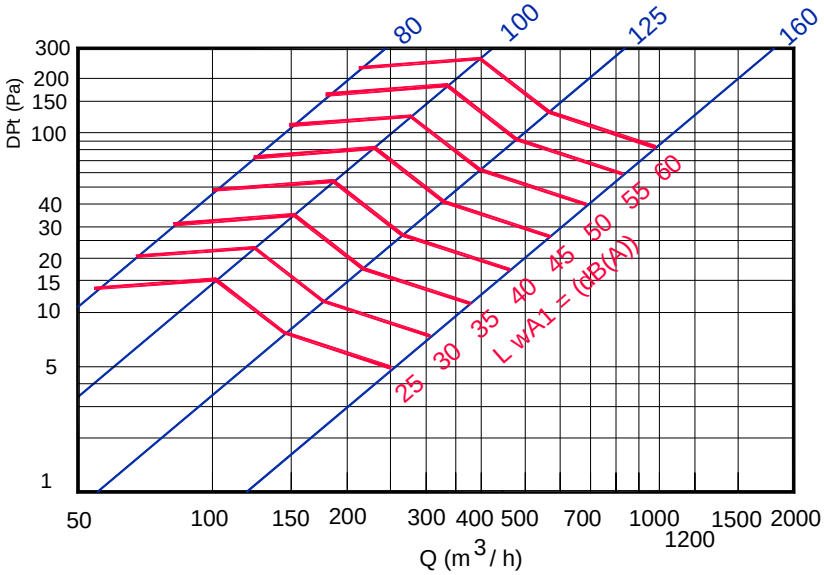

FOC

PRESSURE LOSS AND SOUND POWER LEVEL.

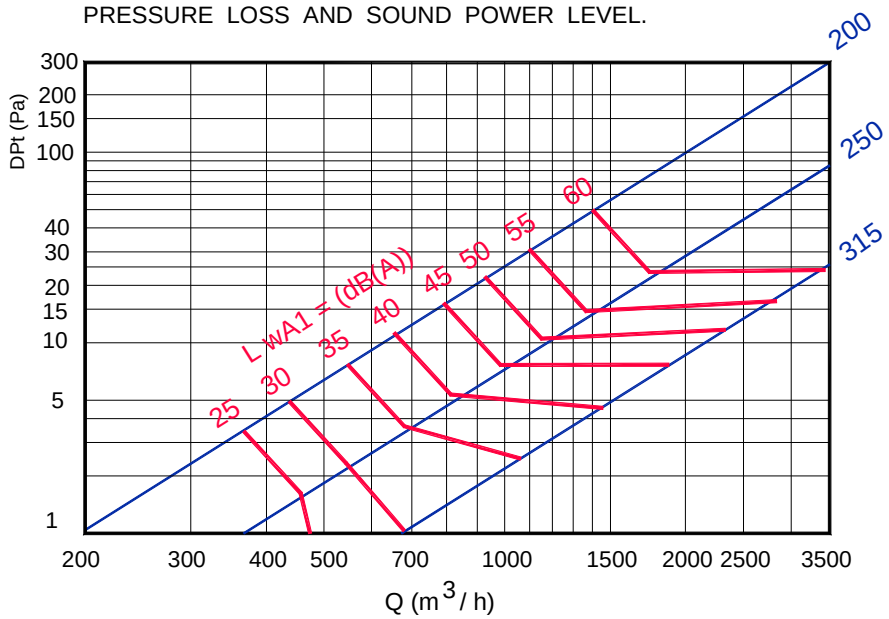
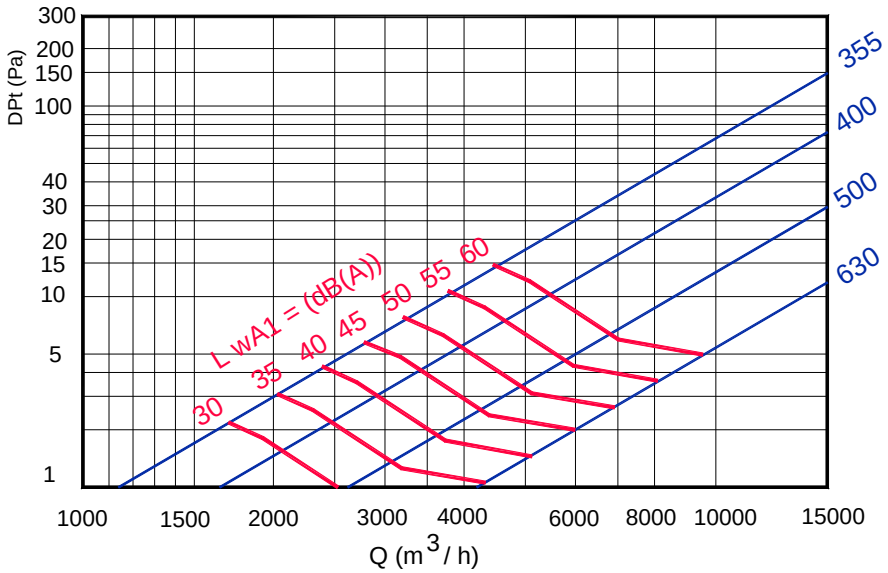
PRESSURE LOSS AND SOUND POWER LEVEL.